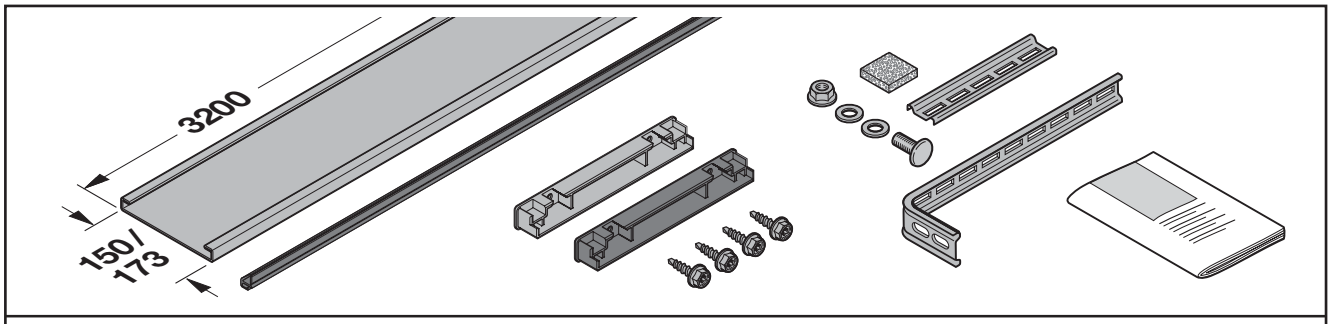
3200
150/
173

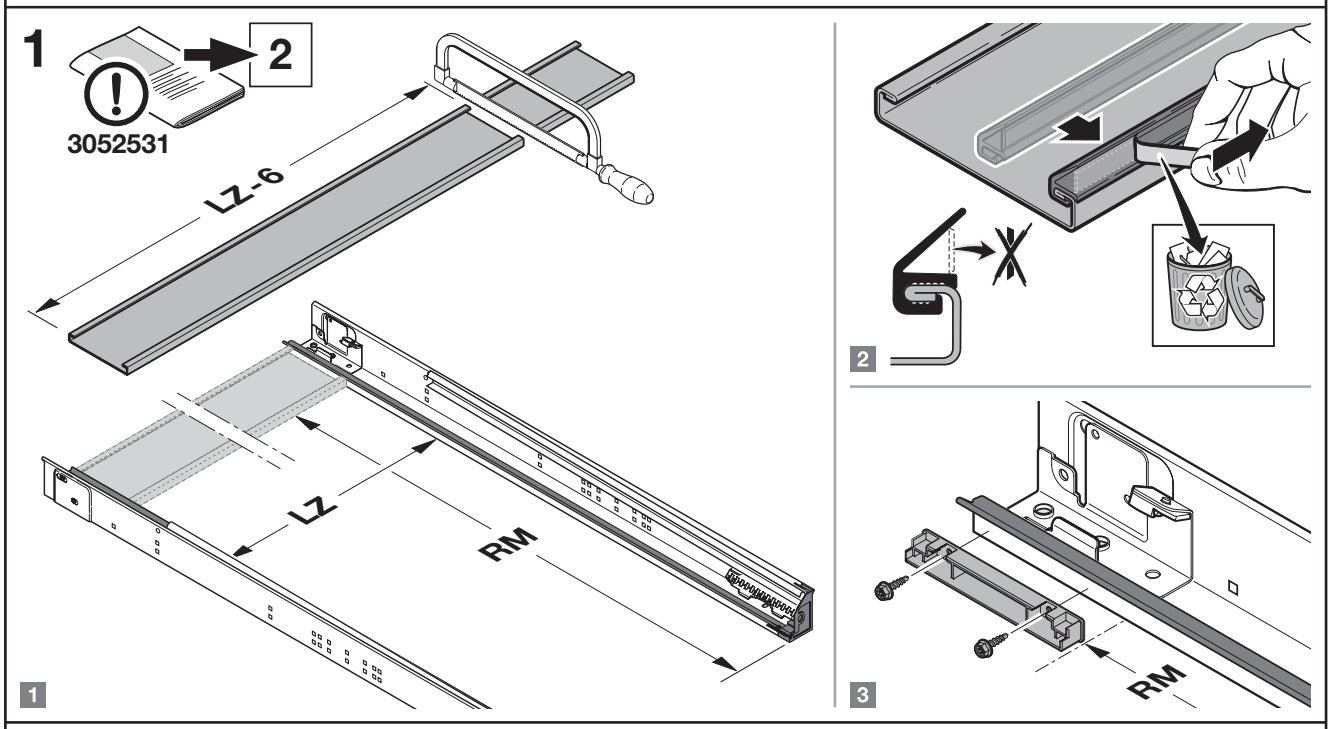
1
2
3052531
LZ-6
LZ
RM
1
2
3
RM

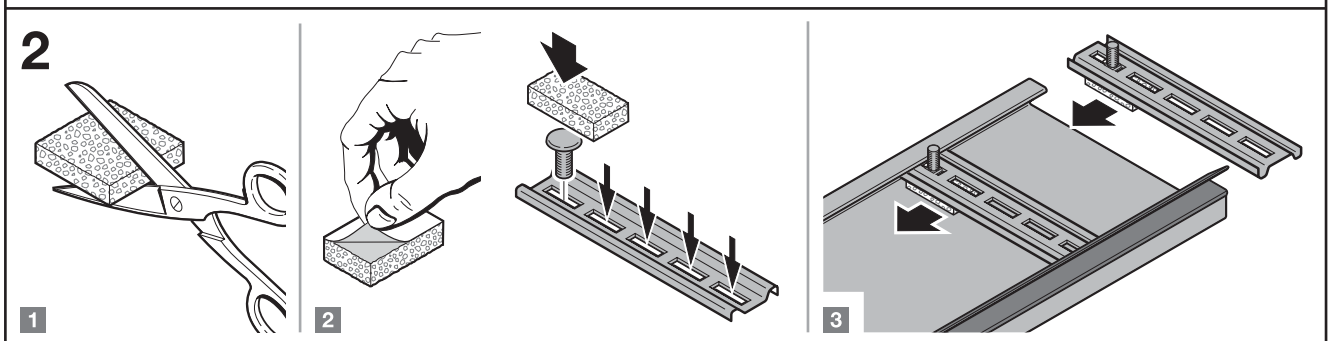
2
1
2
3

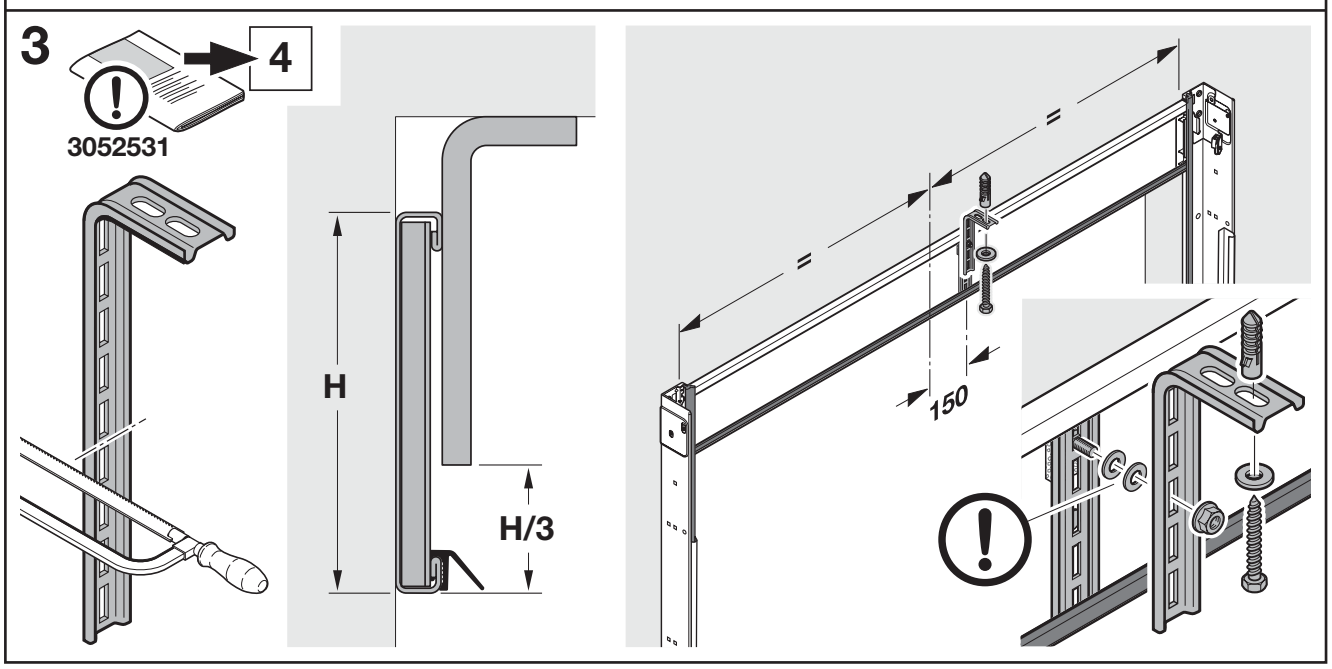
3
4
3052531
H
H/3
=
=
150